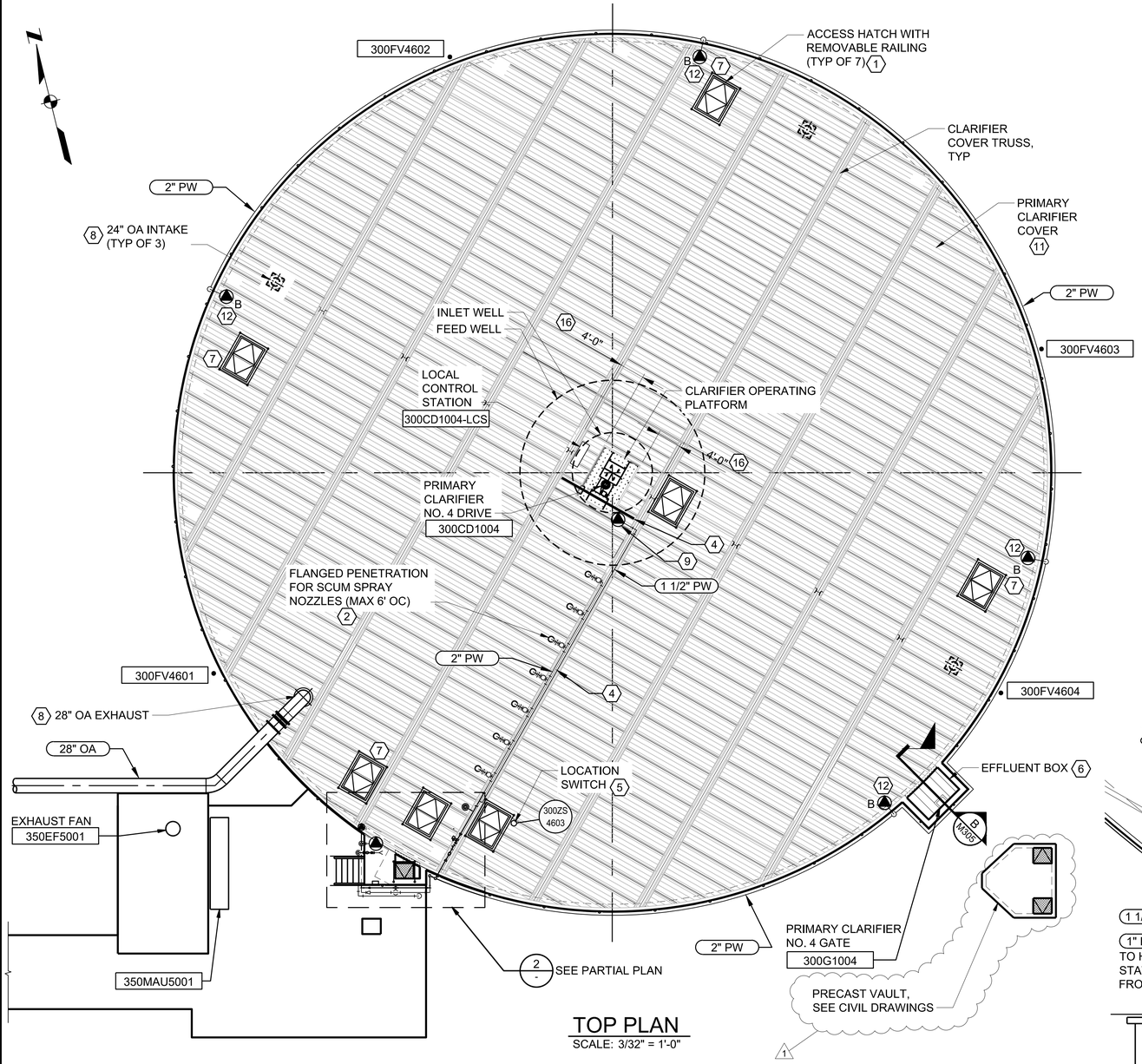

TOP PLAN
SCALE: 3/32" = 1'-0"

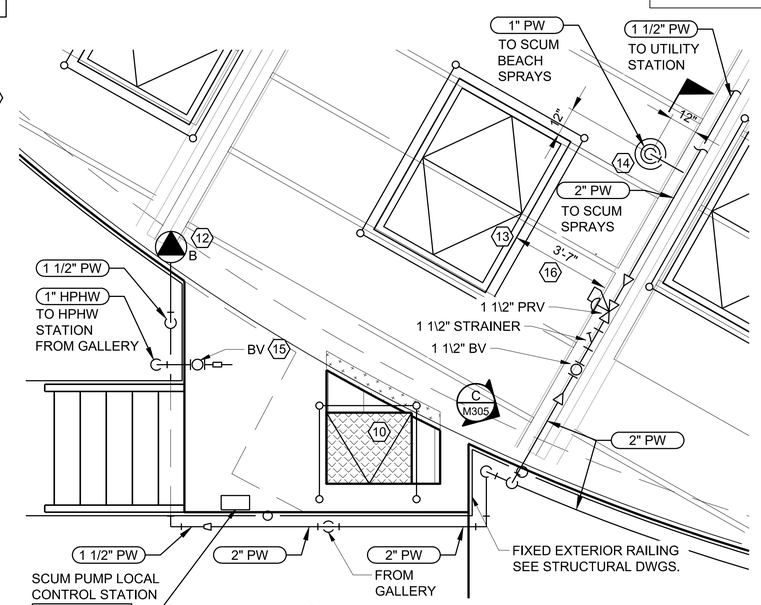

2 PARTIAL PLAN
SCALE: 3/8"=1'-0"

SHEET KEYNOTES

1. CLEAR HATCH OPENING 4' BY 6'.
2. PROVIDE 4-INCH FLANGED PENETRATIONS FOR SCUM SYSTEM PIPING. SEE DETAIL 4/M005. LOCATE CENTER LINE OF PENETRATION 12-INCHES FROM CLARIFIER COVER TRUSS.
3. SEE DETAIL 5/M005 FOR SCUM SPRAY NOZZLES.
4. ALUMINUM SUPPORTS CONNECTED TO THE CLARIFIER COVER TRUSSES. MATERIAL AND FINISH TO MATCH COVER TRUSSES. PROVIDE NUMBER AND LOCATE AS NEEDED TO SUPPORT CONDUIT, PIPE AND LIGHTING. SEE ELECTRICAL DRAWINGS FOR CONDUIT ROUTING AND LIGHTING LOCATIONS. SUPPORTS SHALL NOT BE PLACED DIRECTLY OVER HEAD OF CLARIFIER DRIVE OR IN SUCH A MANNER THAT WOULD IMPEDE CRANE ACCESS TO THE DRIVE FOR ITS REMOVAL.
5. PROVIDE PENETRATION FOR LOCATION SWITCH. SEE SPECIFICATION 11195.
6. EFFLUENT BOX COVER BY CLARIFIER COVER MANUFACTURER.
7. HATCH OPENING SHALL BE 4'-6" FROM THE INSIDE FACE OF THE CLARIFIER WALL AT THE CLOSEST POINT.
8. OA INTAKE PER DETAIL 6/M006. OA EXHAUST PER DETAIL 7/M006. LOCATE INTAKE AND EXHAUST CONNECTIONS 62 FEET FROM CLARIFIER CENTER.
9. PROVIDE TYPE B UTILITY STATION MOUNTED TO CLARIFIER COVER TRUSS. SUPPORTS FOR UTILITY STATION TO BE OF SAME MATERIAL AND FINISH AS THE CLARIFIER COVER TRUSSES.
10. WET WELL COVER BY CLARIFIER COVER MANUFACTURER. HATCH CLEAR OPENING TO BE 2'-6" BY 3'-0". REMOVABLE RAILING 3 SIDES. GAP BETWEEN REMOVABLE RAILING AND FIXED EXTERIOR RAILING TO BE 4 INCHES MAXIMUM.
11. COVER DESIGN TO BE COORDINATED WITH THE CLARIFIER MECHANISM PER SPECIFICATIONS 11195 AND 13132. PRIMARY CLARIFIER COVER SHALL EXTEND TO WITHIN 2 INCHES OF THE EXTERIOR FACE OF THE CLARIFIER WALL IN ALL LOCATIONS.
12. PROVIDE TYPE B UTILITY STATION.
13. CENTER HATCH OVER CLARIFIER SCUM BEACH.
14. 4-INCH FLANGED PENETRATION PER DETAIL 4/M005. PROVIDE COVER AND DIELECTRIC ISOLATION SIMILAR TO DETAIL 5/M005.
15. HPHW UTILITY STATION, PROVIDE HOSE RACK. SEE UTILITY STATION DETAILS ON M003. WARNING SIGN TO READ "HIGH PRESSURE HOT WATER." SEE SPECIFICATION SECTION 15050 FOR PIPE AND VALVE REQUIREMENTS.
16. MINIMUM CLEARANCE TO CLARIFIER COVER TRUSS.

DRN: WAS	ORIG DATE: AUGUST 2020				
DSN: CLW	DWG #: M303				
CHK: CLW	CAD FILE #: 1876008.13 - M303				
APPD: CLW	SCALE: AS SHOWN				
THIS BAR IS ONE INCH WHEN DRAWING IS FULL SCALE.		1	3/10/2023	KRC	MDH	ADDENDUM #1
		REV #	DATE	DRN	APPD	DESCRIPTION

CleanWater Services
2550 SW Hillsboro Hwy. Hillsboro, Oregon 97123-9379

PROJ NAME: ROCK CREEK AWWTF PRIMARY CLARIFIER NO. 4 TREATMENT EXPANSION
KJ Kennedy Jenks

SHEET TITLE: MECHANICAL PRIMARY CLARIFIER No. 4 TOP PLAN

SHEET: 111 OF: 174
PLOT DATE: 3/9/23
PLC #: N/A
CWS PROJ #: 7012

DWG #: M303

REGISTERED PROFESSIONAL ENGINEER 64471PE DIGITALLY SIGNED OREGON JAN 23, 2001 CHARLES L. WRIGHT JR.
ENGR STAMP: EXPIRES: 6/30/24

100% SUBMITTAL
(FOR BID)

File: C:\bms\kice-pw\d0177849\1876008.13 - M303 - PRIMARY CLARIFIER No.4 COVER.dwg TAB:KJ
Plotted: 3/9/23 at 8:35am By: KevinCobabe